The bridge to possible

Advanced Configurations (at-scale) for Intersight Managed Mode (IMM)

Matthew Faiello
Technical Marketing Engineer
Cloud Networking-Compute Business Unit
@X mfaiello
BRKCOM-2005

Cisco Webex App

https://ciscolive.ciscoevents.com/ciscolivebot/#BRKCOM-2005

Questions?

Use Cisco Webex App to chat with the speaker after the session

How

1. Find this session in the Cisco Live Mobile App
2. Click “Join the Discussion”
3. Install the Webex App or go directly to the Webex space
4. Enter messages/questions in the Webex space

Webex spaces will be moderated by the speaker until June 7, 2024.

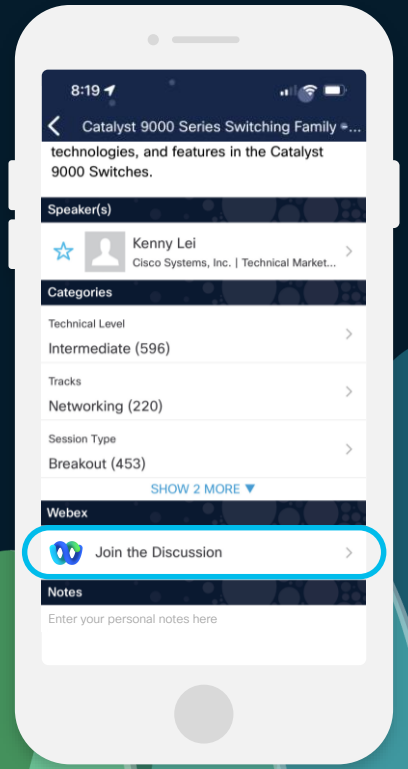

© 2024 Cisco and/or its affiliates. All rights reserved. Cisco Public

Agenda

- Intersight Organizations & Resource Groups
- Intersight RBAC
- Shared Organizations in IMM
- Cloning Across Organizations
- LAN and SAN Connectivity Policies
- Transitioning from Standalone Organizations to Shared Organizations
- IMM Server Policy Cleanup – Discovery Cleanup
- Domain Profile & Chassis Profile Templates
- IMM Learning Resources

© 2024 Cisco and/or its affiliates. All rights reserved. Cisco Public

Intersight Organizations & Resource Groups

Intersight Organizations & Resource Groups

What are Organizations and Resource Groups?

- Organizations and Resource Groups are Intersight constructs that enable an administrator to ”segment/compartmentalize” the UCS Infrastructure and apply applicable, desired RBAC. It enables multi-tenancy
- Organizations directly compartmentalize the Logical Policy Model (Pools, Policies, Templates and Profiles). The Organization get’s designated first with the creation of any policy

© 2024 Cisco and/or its affiliates. All rights reserved. Cisco Public

Intersight Organizations & Resource Groups

What are Organizations and Resource Groups?

- Resource Groups reflect Hardware Membership, and then 1 or more RGs get added to Organizations. (Think of UCS Central Domain Groups)
- Intersight includes a Default Organization and Default Resource Group
- For Policy Creation, you select the Organization first thing
- For HW Device Claim, all HW gets added to “Default RG” by default…can be edited/removed by Account Administrator

© 2024 Cisco and/or its affiliates. All rights reserved. Cisco Public

Intersight Organizations & Resource Groups

So why use Organizations and Resource Groups?

- RBAC Applied to the Organizations & Resource Groups. Do you need to compartmentalize your infrastructure? Who manages what?
- Need for security or compliance?
- Segment on business group, site location, or customer?
- Segment on Domain/Server configuration differences (Bare Metal/OS Type/Hypervisor Cluster)?

© 2024 Cisco and/or its affiliates. All rights reserved. Cisco Public

Intersight Organizations & Resource Groups

Organizational differences from UCSM?

- No Hierarchy - No Policy Resolution Path. Not a bad thing, and Policy at-scale is addressed with IMM Shared Organizations
- Intersight Organizations are flat, all the same, and some can be Shared Organizations, and some can be designated Target Organizations
- No Automatic deploy (UCSM used Maint Policy w/user Ack). Intersight is not always trying to make sure ”end-state” matches “desired-state” Instead, with Intersight, we have Drift Detection and provide visual alerting when we need to redeploy profiles upon a given change
- Segmentation Criticality Difference – “Blast Radius” Concerns …

© 2024 Cisco and/or its affiliates. All rights reserved. Cisco Public

Intersight Organizations & Resource Groups

ORG-HR (Policy Model)

Pools (UUID, MAC, IP, WWNN/WWPN)

BIOS
Boot
LAN Connectivity Policy
SAN Connectivity Policy
vKVM

SP-Template
SPs

RG-HR (HW Assigned)

UCS Domain-HR

Standalone-HR1
Standalone-HR2
Standalone-HR3

© 2024 Cisco and/or its affiliates. All rights reserved. Cisco Public

Intersight Organizations & Resource Groups

User Roles – RBAC (Roles = Organization (s) + Privileges

ORG-HR

Pools (UUID, MAC, IP, WWNN/WWPN)

BIOS
Boot
LAN Connectivity Policy
SAN Connectivity Policy
vKVM

SP-Template
SPs

RG-HR

UCS Domain-HR

Standalone-HR1
Standalone-HR2
Standalone-HR3

© 2024 Cisco and/or its affiliates. All rights reserved. Cisco Public

Intersight Organizations & Resource Groups

Organization & Resource Groups – Scalability Limits

- An Intersight Account can have up to 50 Organizations
- An Intersight Account can have up to 100 Resource Groups
- Up to 10 Resource Groups can be added to an Organization

- Note: Organizational Sharing Rules covered later …

© 2024 Cisco and/or its affiliates. All rights reserved. Cisco Public

Intersight Organizations & Resource Groups

NEW! Adding Servers to Resource Groups
(verses the entire UCS Domain)

- Up to this point, you had to add an entire UCS Domain to a Resource Group (RG).
- We are excited to bring to Intersight an important capability of adding individual UCS Domain Servers (B/X Series IMM Blades) to RGs
- This will assist Large Enterprise and MSP's with further segmenting a UCS Domain across multiple Use-Cases and Customers.

© 2024 Cisco and/or its affiliates. All rights reserved. Cisco Public

Adding Servers to Resource Groups

Intersight | System | Search

Settings
Admin
Targets
Software Repository
Tech Support Bundles
Audit Logs
Sessions
Licensing

New Command Palette
Navigate Intersight with ⌘+K or go to Help > Command Palette

Resource Groups > RG-Server-2

Edit Resource Group

General

Name * RG-Server-2

Description

Description

Resources

Custom All

Selecting the checkbox will include the target and all sub-targets, as applicable, in the Resource Group, and any new sub-targets will be added automatically.
To customize sub-target selection, click the Edit icon in the Sub-Target column. To learn more, visit Help Center.

Add Filter | Export | 1 items found | 10 per page | 1 of 1

Name	Targets Sub-Target	Health	Status	Type	Claimed Time	Claimed By
B26-6536-FI	2 of 3	Healthy	Connected	Intersight Managed...	May 14, 2024 5:36 ...	mfaiello@cisco.com

Selected 1 of 1 Show All Unselect All

1 of 1

Cancel Save

© 2024 Cisco and/or its affiliates. All rights reserved. Cisco Public

Adding Servers to Resource Groups

Intersight | System | Search

Settings
Admin
Targets
Software Repository
Tech Support Bundles
Audit Logs
Sessions
Licensing

New Command Palette
Navigate Intersight with ⌘+K or go to Help > Command Palette

Resource Groups > RG-Server-
Edit Resource

General
Name * RG-Server-2
Description
Resources
Custom All
Selecting the c added automat To customize s
Add Filter
Name
B26-6536-FI
Selected 1 of 1 Sho
Cancel

Sub-Targets
Target: B26-6536-FI

Servers

Add Filter | Export | 3 items found | 10 per page | 1 of 1

Name	Health	Mo...	Cl	Me...	UC...	Ser...	Bu...	Usage in Resou...
B26-6536-FI-1-1	Critical	UCSX-2...	153.6	1024.0	B26-65...		5.2(1.24...	RG-Server-... (2)
B26-6536-FI-1-2	Critical	UCSX-2...	153.6	1024.0	B26-65...		5.2(1.24...	RG-Server-... (2)
B26-6536-FI-1-3	Healthy	UCSX-2...	140.8	1024.0	B26-65...		5.2(1.24...	RG-Server-... (2)

Selected 2 of 3 Show Selected Unselect All 1 of 1

Decommissioned Servers

Add Filter | Export | 0 items found | 50 per page | 0 of 0

Name	Type	ID	Model	Serial	Decommissioned...	Usage in Resource Groups

NO ITEMS AVAILABLE

0 of 0

Cancel | Update

© 2024 Cisco and/or its affiliates. All rights reserved. Cisco Public

Intersight RBAC

Intersight RBAC

Reviewing Intersight RBAC Roles – and Assigning Roles to Users

- Currently, Intersight includes 12 system defined Roles and 43 assignable Privileges
- System Roles cannot be changed
- Custom roles can be created and in creating the custom role you can select which Organization (all or specific) and what assignable Privilege you wish to associate with that Organization.
- You can add additional Organization-Privilege combinations to that custom role.

© 2024 Cisco and/or its affiliates. All rights reserved. Cisco Public

System Roles – Built in …

- Account Administrator
- Read-Only
- Device Technician
- Device Administrator
- Server Administrator
- User Access Administrator
- Storage Administrator
- Workload Optimizer Admin
- Workload Optimizer Deployer
- Workload Optimizer Observer
- Workload Optimizer Automator
- HX Cluster Administrator

© 2024 Cisco and/or its affiliates. All rights reserved. Cisco Public

System Privileges – 43 Available … includes

- Account Administrator
- Read-Only
- User Access Administrator
- Device Administrator
- Device Technician
- Server Administrator
- Storage Administrator
- Virtualization Administrator
- UCS Domain Administrator
- Audit Log Viewer
- SAN Administrator
- SAN Operator
- Network Operator
- Network Administrator
- Nexus Observer
- Nexus Administrator
- Nexus Config Administrator
- Integrated Systems Operator
- Integrated Systems Admin
- Support Services
- Service Designer
- Catalog Use
- Catalog Administrator
- Service Operator
- Nexus Analyst
- vKVM Only

© 2024 Cisco and/or its affiliates. All rights reserved. Cisco Public

Intersight.com/help – Resources

Summary of Roles and Privileges

Intersight | SaaS Help Center

- Home
- Getting Started
- What's New
- Infrastructure Service
- Cloud Orchestrator
- Workload Optimizer
- My Dashboard
- System
- Supported Systems
- Videos
- FAQs
- Resources
- Troubleshooting
- Bugs
- Device Console
- Glossary

- All Users except the Account Administrator have a read-only view of the License Status and Account Details page under **Settings**.
- Server Administrator and HyperFlex Administrator can view Alarms and details of an alarm.
- All users can generate a maximum of 3 API keys per role.
- The account lockout banner for less than two Account Administrators can be snoozed for 30 days since acknowledgement and an alarm will be visible to users having read access to Alarms.

Summary of Roles and Privileges

The following table provides a list of Intersight roles and corresponding permissions.

Privileges / Permissions	Account Administrator	Read-Only (View Access only)	Device Technician	Device Administrator	User Access Administrator	Server Administrator	Storage Administrator	Virtualization Administrator	Workflow Designer	UCS Domain Administrator	Audit Log Viewer	External Syslog Administrator (Applicable for only Intersight Virtual Appliance)	SAN Administrator	SAN Operator	Network Administrator
Dashboard views	✔	✔				✔	✔			✔			✔	✔	✔
Servers Table view	✔	✔				✔				✔			✔		✔
HyperFlex Clusters Table view	✔	✔													
Fabric Interconnect Table view	✔	✔				✔ View details				✔ View details			✔	✔	✔
Storage Table view	✔	✔					✔								
Virtualization Table view	✔	✔						✔							
Server Profiles	✔	✔				✔ Create Server Profiles				✔			✔		✔
Policies	✔	✔				✔ Create Server policies				✔			✔	✔	✔

© 2024 Cisco and/or its affiliates. All rights reserved. Cisco Public

Creating a Custom Role

Selecting Org(s) and Privilege

Select Organization …

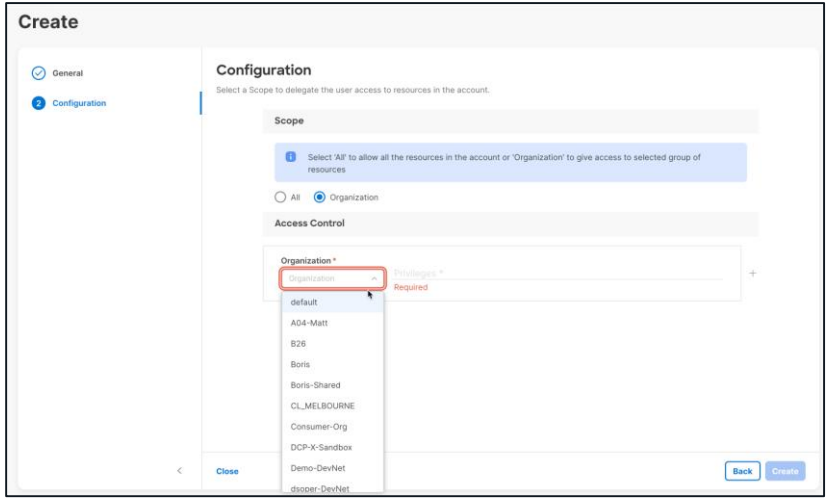

Select Privilege …

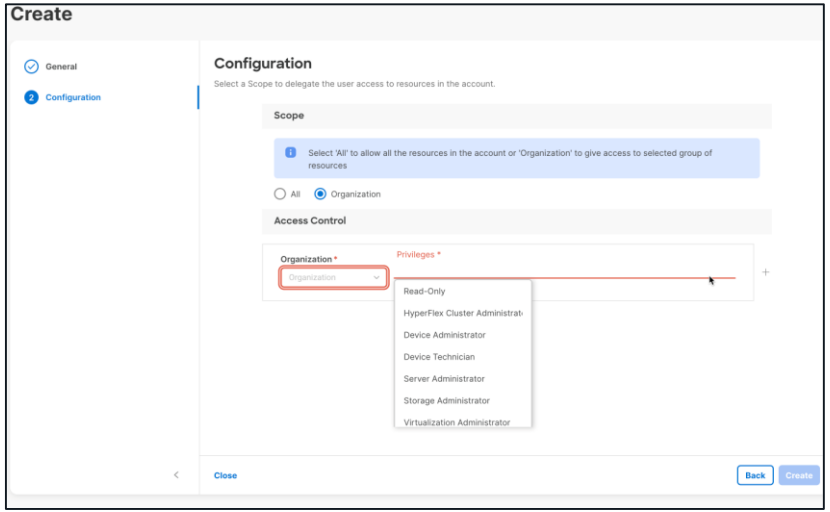

© 2024 Cisco and/or its affiliates. All rights reserved. Cisco Public

New Enhanced RBAC!

Coming End of CY24/Beginning CY25

Exciting Changes Coming! – Enhanced RBAC

- Can Use Existing Roles (Privilege Set*) as a baseline to Modify, or Create Net-New
- Each Privilege Set is broken-down in successive, more granular settings
- Provides ability to customize Individual Actions

© 2024 Cisco and/or its affiliates. All rights reserved. Cisco Public

Coming - New Intersight Enhanced RBAC!

Settings
Admin

← Settings

Create Custom Privilege Set

Create a Customer Privilege Set

1. General
2. Select Existing Privileges
3. Add Granular Privileges
4. Summary

Select Existing Privileges

Select the desired privileges, by adding existing system- or custom-defined privilege sets, to create a new custom privilege set.

Add Existing | Add Granular Privileges

You can optionally use one or more existing system- or custom-defined privilege sets to create a new custom privilege set. To only use granular privileges, skip this to step **Add Granular Privileges**. Learn more in the **Help Center**.

Add Filter | 30 Items found | 10 per page | 1 of 3

Name	Type	Description
Account Administrator	System Defined	Access and manage all services and resources in Intersig
Chassis Administrator	Custom	Manage chassis for my account
Device Administrator	System Defined	Claim and manage targets
Device Technician	System Defined	Claim a target
HX Cluster Administrator	System Defined	Create and manage HyperFlex Clusters
SAN Administrator	System Defined	Manage MDS switch objects in Intersight
SAN Operator	System Defined	View MDS switch objects in Intersight
Server Administrator	System Defined	Manage Servers
Storage Administrator	System Defined	Manage storage targets in Intersight
Workflow Administrator	Custom	Manage workflows

1 of 3

Cancel | Back | Next

Can Start with Adding System and Custom

© 2024 Cisco and/or its affiliates. All rights reserved. Cisco Public

Coming - New Intersight Enhanced RBAC!

Intersight | System | Search | 50 | 20

Settings
Admin

← Settings

Create Custom Privilege Set

Continue to Add/Remove Granular Privileges

- General
- Select Existing Privileges
- 3 Add Granular Privileges
- 4 Summary

Add Granular Privileges

Select the desired granular privileges to create a new custom privilege set.

Allow Privilege Updates enables any newly introduced privileges or any changes to be auto included in the new custom privilege set. Learn more in the Help Center.

☑ Allow Privilege Updates

Privileges that were selected in the previous step are already included here. Learn more in the Help Center.

Select All | Show Selected (19) | Search

Configure Intersight Infrastruct...	Configure Physical Server	Decommission Server
Operate Intersight Infrastructur...	Configure Server Profile	Recommission Server
Support Intersight Infrastructur...	Configure Server Profile Templ...	Remove Server
System-Settings	Configure Physical Chassis	Upgrade Server Firmware
System-Administration	Configure Chassis Profile	Install Operating System
Infrastructure Service-Operate	Configure Chassis Profile Temp...	Set Server Asset Tag
	Configure Physical Domain	Set Server User Label
	Configure Domain Profile	Set Server License Tier
	Configure Domain Profile Temp...	Clear TPM

Cancel | Back | Next

© 2024 Cisco and/or its affiliates. All rights reserved. Cisco Public

Coming - New Intersight Enhanced RBAC!

Intersight | System | Search | 50 | 20

Settings
Admin

← Settings

Create Custom Privilege Set

General
Select Existing Privileges
Add Granular Privileges
4 Summary

Summary

Review the details of the custom-defined privilege set.

Summary of selected Privileges

General

Name
Custom_Privilege_Set_3

Allow Privilege Updates
Yes

Description
Config. Server privilege set

Privileges (19)

Configure Intersight Infrastructure
Operate Intersight Infrastructure

Configure Physical Server

Decommission Server
Recommission Server
Remove Server
Upgrade Server Firmware
Install Operating System
Set Server Asset Tag
Set Server User Label
Set Server License Tier
Clear TPM
Set IMC Certificate

Create

Cancel | Back | Create

© 2024 Cisco and/or its affiliates. All rights reserved. Cisco Public

Shared Organizations in IMM

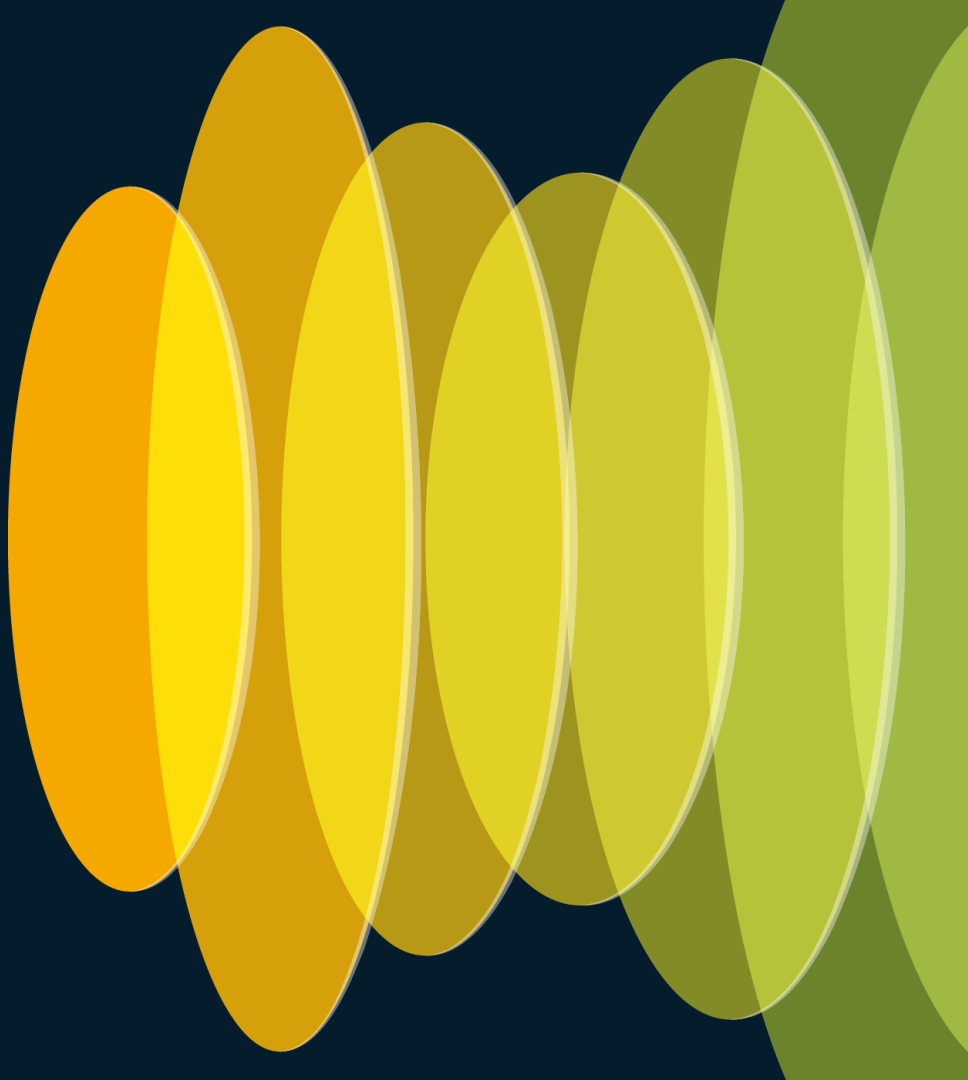

Intersight IMM – Shared Organizations

- Original IMM mandated Silo'd Organization structures
- Now we have Shared Organizations in IMM
- Addresses Policy Sprawl in creating large infrastructures
- Specifically focused on the IMM Policy Model
- Shared Organizations reduce OPEX
- Compare with UCSM/Central Org Policy Resolution (no nesting or hierarchical upward policy resolution)

© 2024 Cisco and/or its affiliates. All rights reserved. Cisco Public

IMM Shared Organizations - Scalability

- Max Organizations in Intersight Account = 50
- Max Organizations that can be added to a Role = 5
- Max Sharing Rules in an Intersight Account = 200
- Max Resource Groups that can be added or Organization = 10
- Max Resource Groups in an Intersight Account = 100
- Max resources that can be added to a Resource Group = 5,000
- Note: Looking to expand these limits in the future…

© 2024 Cisco and/or its affiliates. All rights reserved. Cisco Public

IMM Shared Organizations - Rules

- A source Organization can be shared with up to 49 consumer Organizations (50 per Account = 1 Shared + 49 Consumer)
- Example: 4 source Orgs shared with 46 consumer Orgs. That is 4+46=50 Total Orgs and 4x46=184 (max is 200) sharing rules
- An Organization with a Resource Group attached, cannot be shared
- Phase-1: Port Policies (and embedded policies) must be in the same Org. Supported possibly by year-end.
- A consumer Org user must have at-least Read Access to the Shared source Org

© 2024 Cisco and/or its affiliates. All rights reserved. Cisco Public

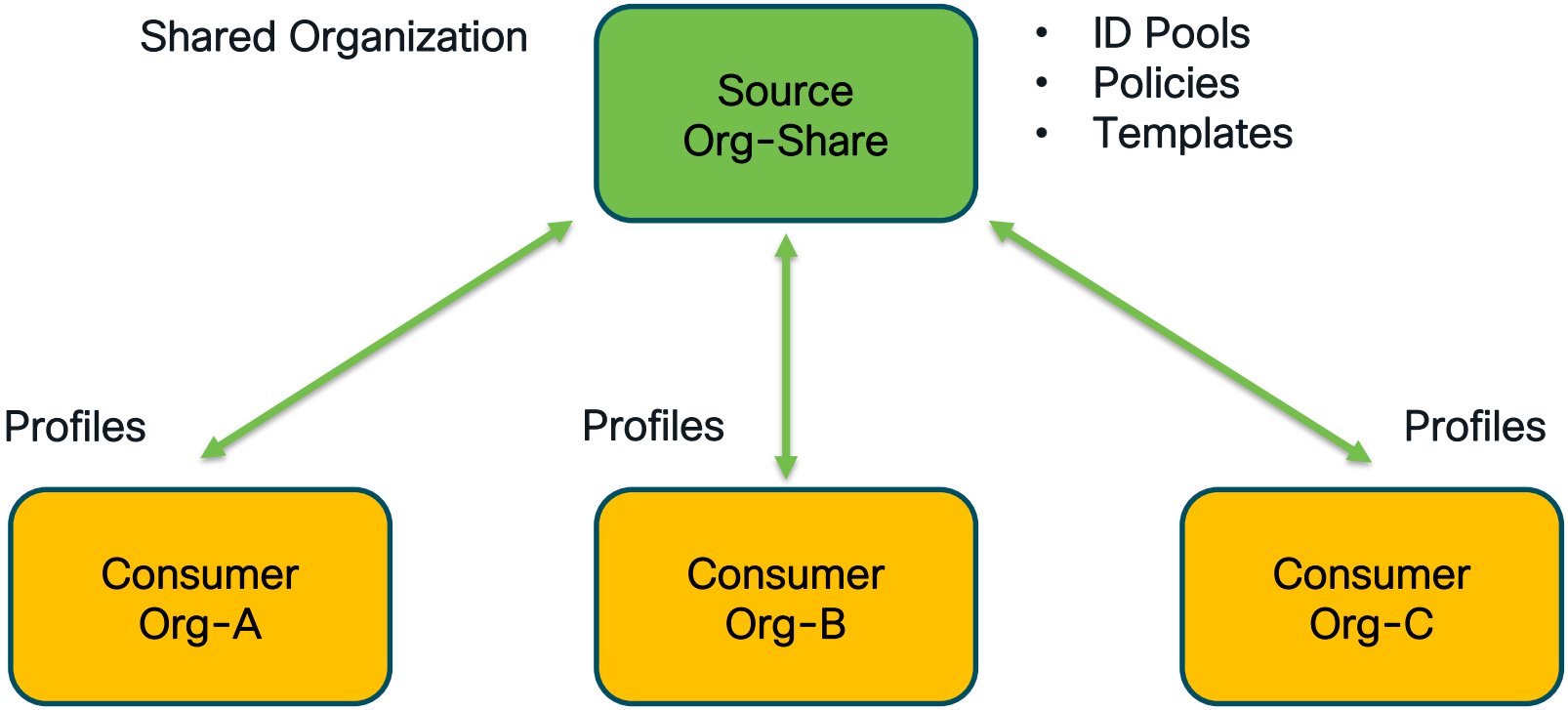

GREEN – Shared Org
ORANGE – Target Org

© 2024 Cisco and/or its affiliates. All rights reserved. Cisco Public

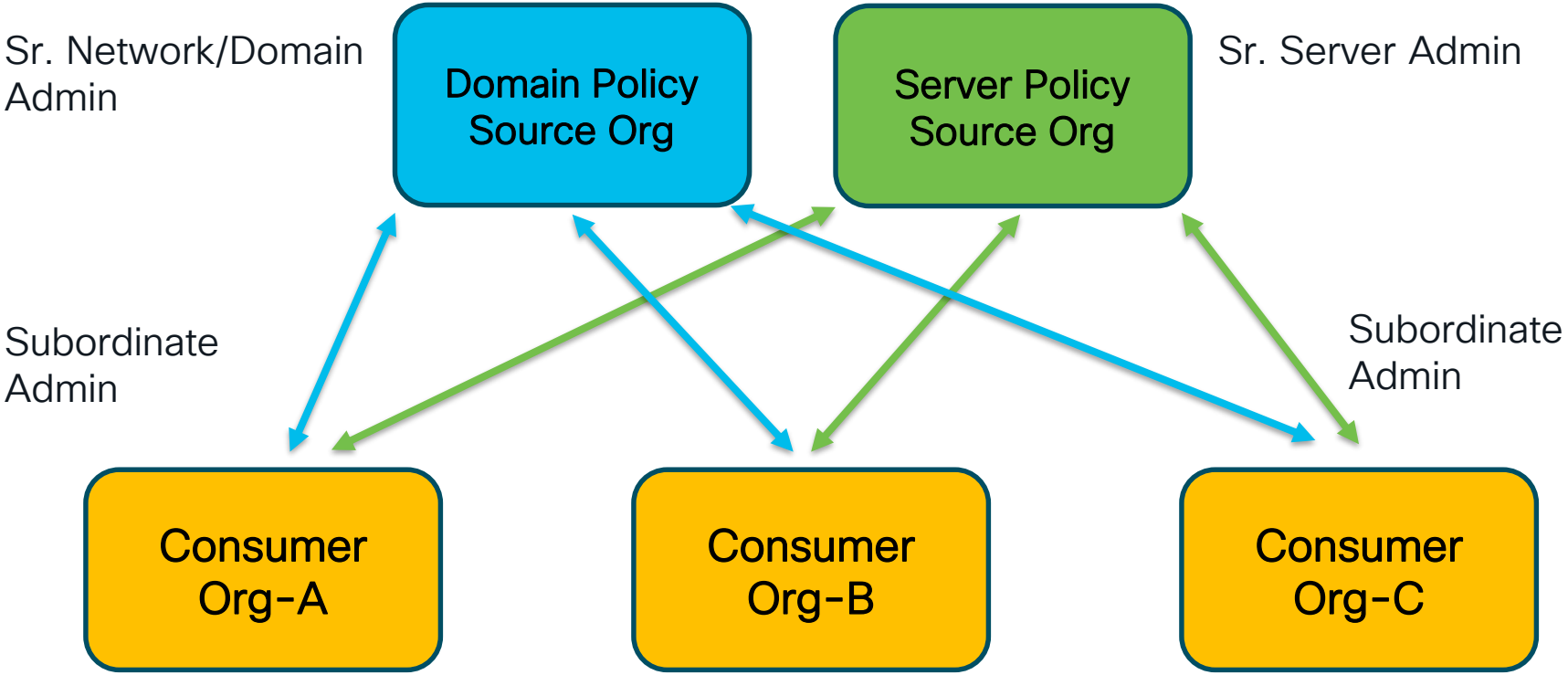

GREEN – Shared Server Policy Org
BLUE – Shared Domain Policy Org
ORANGE – Target Org

© 2024 Cisco and/or its affiliates. All rights reserved. Cisco Public

Org Sharing & Policy Cloning Whitepaper

https://www.cisco.com/c/en/us/products/collateral/cloud-systems-management/intersight/imm-con-sharing-across-organization-cloning-wp.html

© 2024 Cisco and/or its affiliates. All rights reserved. Cisco Public

Cloning across Organizations

Policy Cloning

- For times where you want to replicate a policy to another Org and have it remain as its own entity, no connection to the source Org
- Great utility for “scaling-out” UCS Architectures.
- Can Clone within same Organization and across Organizations
- No Org Sharing required to Clone across Organizations
- For Policies that do not include embedded Policies or Pools, then those single policies are cloned to the destination Organization with the same name
- Note: Deep Clone of Server Profile Templates coming by end of June 2024!

© 2024 Cisco and/or its affiliates. All rights reserved. Cisco Public

Policy Cloning – Across Organizations

- Deep Policy Clone Behavior – For Policies with **embedded** Policies or Pools (LAN/SAN Connectivity Policies, for example) the User can choose one of 2 behaviors …
  1. **Same Name** – Use policies and pools in the destination Org with the same name – otherwise clone them, if not found
     - If any policies in destination Org have same name (exactly matches – case sensitive) … the embedded polices in the destination Org will substitute for the embedded policies in the source Org (be careful!)
  2. **Clone All** – clone all policies and pools into the destination Org
     - All policies cloned – if a policy exists in the destination Org with the same name as the Source policy, then a clone of the original will be created with a suffix and used by the parent cloned policy

© 2024 Cisco and/or its affiliates. All rights reserved. Cisco Public

Deep Policy Cloning – “Same Name” Example

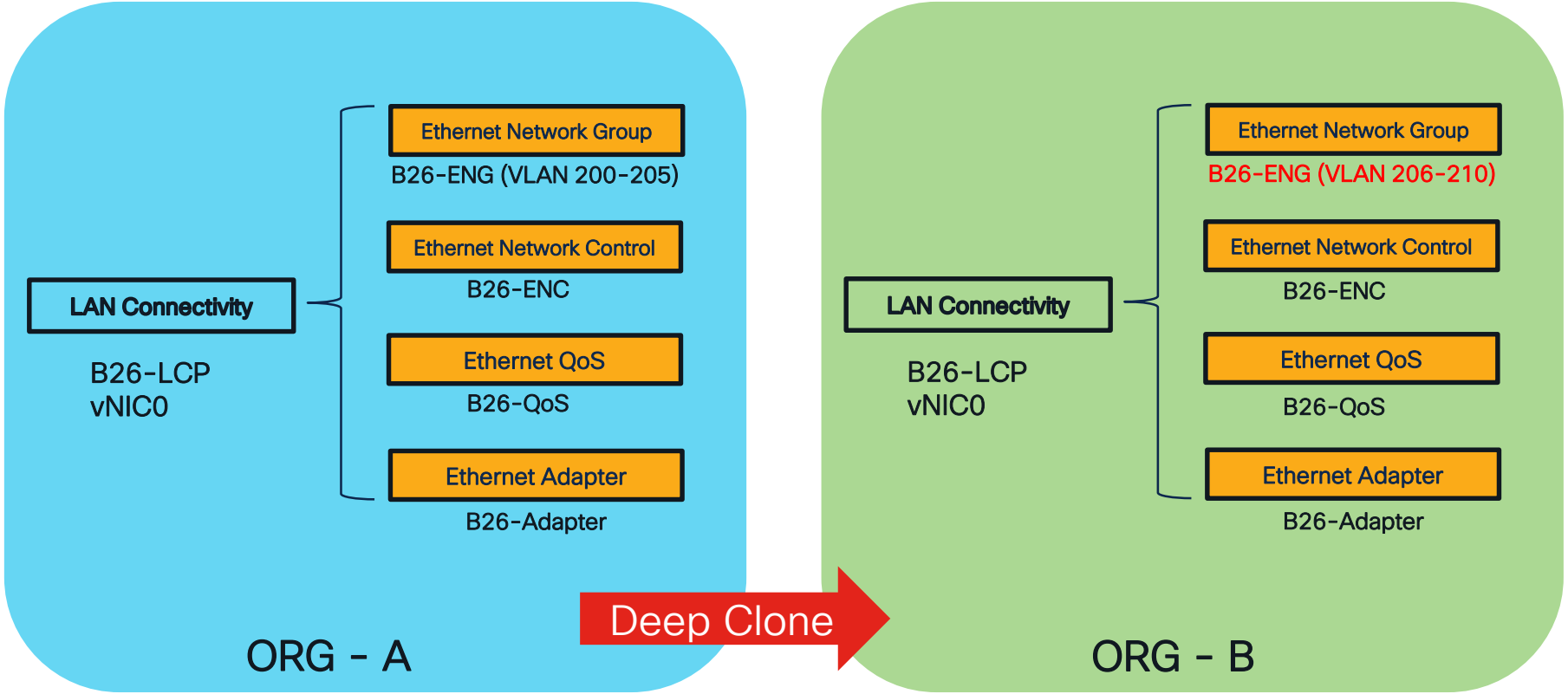

© 2024 Cisco and/or its affiliates. All rights reserved. Cisco Public

Deep Policy Cloning – “Clone All” Example

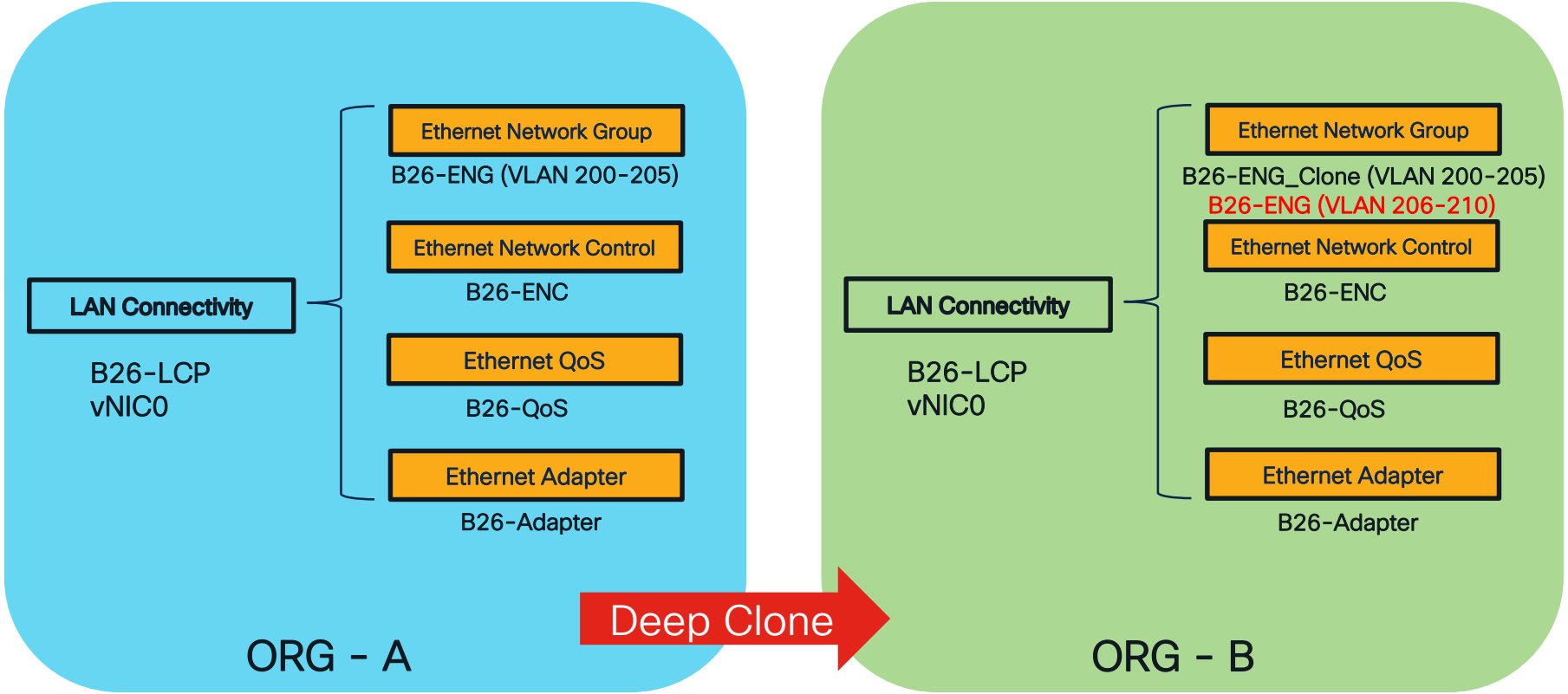

© 2024 Cisco and/or its affiliates. All rights reserved. Cisco Public

Org Sharing & Policy Cloning Whitepaper

https://www.cisco.com/c/en/us/products/collateral/cloud-systems-management/intersight/imm-con-sharing-across-organization-cloning-wp.html

© 2024 Cisco and/or its affiliates. All rights reserved. Cisco Public

LAN and SAN Connectivity Policies

LAN & SAN Connectivity Policies

- Use Case 1: Using Auto vNIC Placement - X210C M6 Compute Node with VIC 14425 MLOM + Demo
- Use Case 2: Manual vNIC Configuration w/ Simple Placement - X210C M6 Compute Node with VIC 14425 MLOM + Demo
- Use Case 3: Manual vNIC & vHBA Configuration with Advanced Placement - X210C M6 Compute Node with VIC 14425 MLOM + Demo
- Use Case 4: Manual vNIC & vHBA Configuration with Advanced Placement – B200 M5 with VIC 1440 MLOM & VIC 1480 + Demo

© 2024 Cisco and/or its affiliates. All rights reserved. Cisco Public

Use Case 1:
Using Auto vNIC Placement

Example X210C M6 Compute Node with VIC 14425 MLOM

- Can use Auto vNICs Placement, in which the system defines the Adapter placement and PCI order – Just choose Fabric (A or B)
- Great for single adapter Blades/Servers and you don't necessarily care about the PCI Order of vNICs and vHBAs (vNICs precede vHBAs)
- With Auto-Placement, if more than one Adapter is being used (Example, VIC 1440 and 1480), then the newly created vNICs are distributed across both adapters during SP deployment
- If using Auto vNIC Placement for the LAN Connectivity Policy, then you must also choose Auto Placement for SAN Connectivity Policy. Cannot Mix Placement Options between the two Policies on a given SP

© 2024 Cisco and/or its affiliates. All rights reserved. Cisco Public

Use Case 2:
Manual vNIC Config w/ Simple Placement

Example X210C M6 Compute Node with VIC 14425 MLOM

- With Manual, must select PCI Order, and that order must start with 0 for the first PCIe Device, and then increment for additional PCIe Devices. This unique numbering is per Adapter, and needs to be honored across LAN & SAN Connectivity policies
- Simple Placement allows system to automatically determine the Slot ID and PCI Link (applies to 1300 Series VICs), In case of multiple adapters in the Blade/Server, it chooses the first Adapter and places all the vNICs on that first adapter. Choose Fabric (A or B) and Define PCI Order
- Don’t use Simple Placement for 1300 series VICs with Dual PCI Link

© 2024 Cisco and/or its affiliates. All rights reserved. Cisco Public

Use Case 3:
Manual vNIC/vHBA Config with Advanced Placement

X210C M6 Compute Node with VIC 14425 MLOM

- With Manual and Advanced Placement, that not only allows for selecting PCI Order, but also Slot ID & PCI Link
- Slot ID corresponds to the Adapter in the Server/Blade. Numbering starts with MLOM, and then can be 1-15 afterwards. Single Adapter Configurations can be just MLOM
- PCI Link should be 0, unless you are dealing with a 1300 Series VIC with the Dual PCI Link Cruz-based ASIC
- PCI Order must start with 0 for the first PCIe Device, and then increment for additional PCIe Devices. This unique numbering is per Adapter, and needs to be honored across LAN & SAN Connectivity policies

© 2024 Cisco and/or its affiliates. All rights reserved. Cisco Public

Use-Case 4:
Manual vNIC/vHBA Configuration with Advanced Placement with 2 x Adapters

- B200 M5 Server with VIC 1440 (Slot ID=MLOM) and VIC 1480 (Slot ID=1)
- Setup LAN & SAN Connectivity Polices, creating HA Pair of vNICs and vHBAs, and making sure to place those HA Pair's of PCIe devices on different Adapters

vNIC/vHBA	PCI Order	Placement	Switch ID
vhba0	0	MLOM	A
vhba1	0	1	B
vnic0	1	MLOM	A
vnic1	1	1	B
vnic2	2	MLOM	A
vnic3	2	1	B

© 2024 Cisco and/or its affiliates. All rights reserved. Cisco Public

Intersight LAN & SAN Connectivity Policies

Tutorial and Recorded Demo!

https://www.youtube.com/watch?v=O1oMmwPxjnQ

© 2024 Cisco and/or its affiliates. All rights reserved. Cisco Public

Transitioning from Standalone Orgs to Shared Orgs

Migrating from Standalone Orgs to Shared Orgs

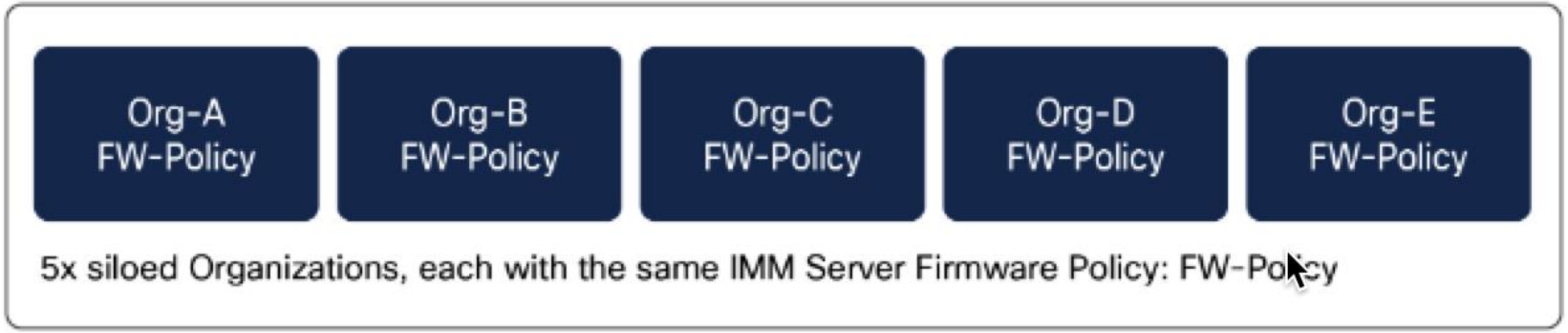

© 2024 Cisco and/or its affiliates. All rights reserved. Cisco Public

Migrating from Standalone Orgs to Shared Orgs

1. Create New Source Org and share with Consumer Orgs
2. No HW Resources in Source Org - Allows Sharing
3. Create same FW Policy, Shared-FW-Policy in Source-Org

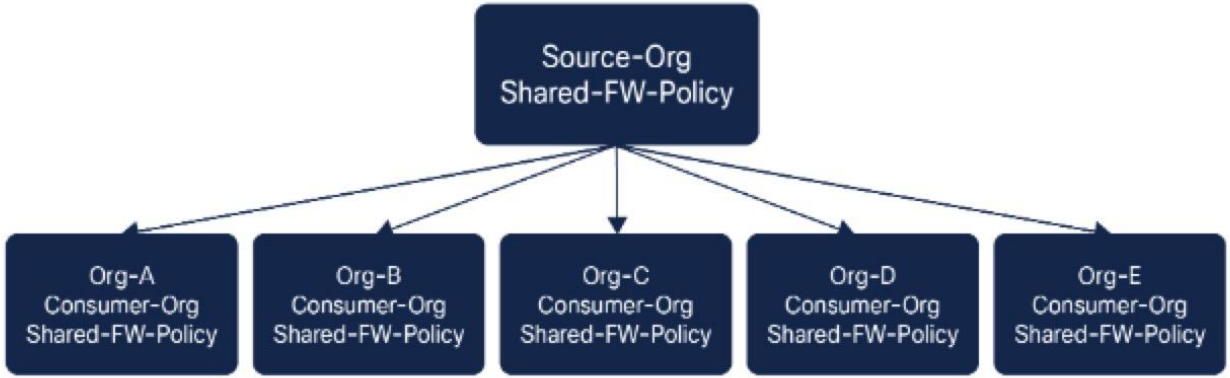

4. Consumer Orgs maintain their existing Resource Groups - No Impact
5. Within each SP-Template/SP in each Consumer Org, edit and change reference for the FW-Policy to the Shared-FW-Policy in the Source-Org
6. After all SP-Templates/SPs have switched their references to the Shared-FW-Policy in the Source-Org, remove the individual FW-Policies in the Consumer-Orgs (Cleanup)

© 2024 Cisco and/or its affiliates. All rights reserved. Cisco Public

ORANGE – Silo'd Org
GREEN – Silo'd Org

T-Org-A
Silo'd

- Domain Policies
- DP Templates/DPs

- UUID/MAC Pools
- Server Policies (FW Policy)
- SP Templates/SPs
- RG – Server 1

T-Org-B
Silo'd

- Domain Policies
- DP Templates/DPs

- UUID/MAC Pools
- Server Policies (FW Policy)
- SP Templates/SPs
- RG – Server 2, Server 3

© 2024 Cisco and/or its affiliates. All rights reserved. Cisco Public

ORANGE – Target Org
GREEN – Target Org
BLUE – Shared Org

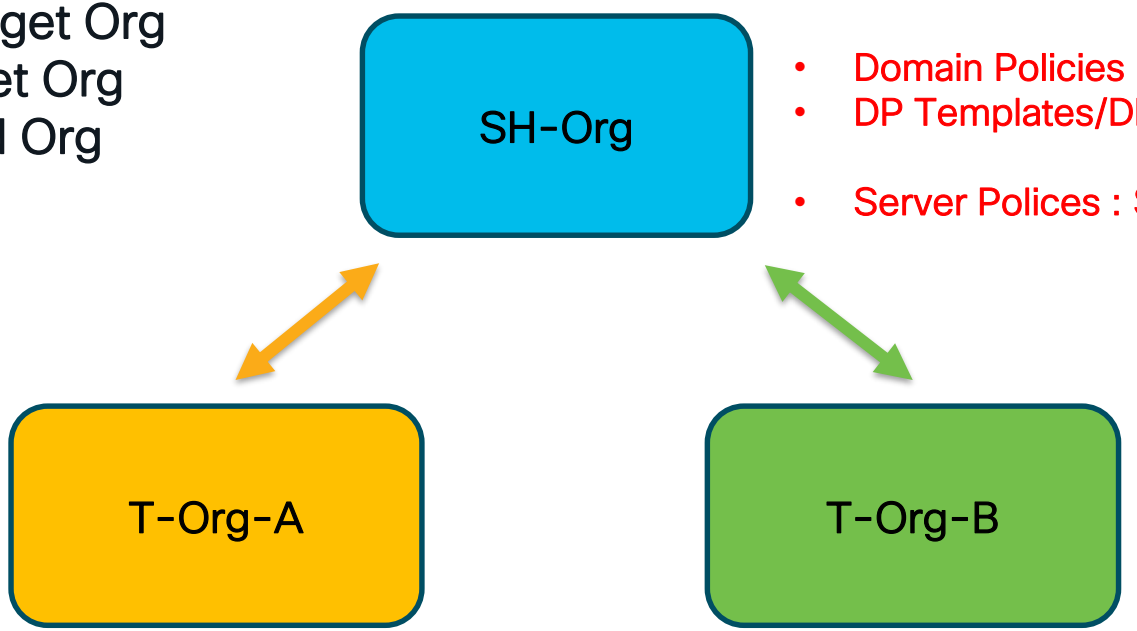

- Domain Policies
- DP Templates/DPs

- Server Polices : SH-FW-Policy

- Domain Policies
- DP Templates/DPs

- UUID/MAC Pools
- Server Policies (FW Policy)
- SP Templates/SPs
- RG – Server 1

- Domain Policies
- DP Templates/DPs

- UUID/MAC Pools
- Server Policies (FW Policy)
- SP Templates/SPs
- RG – Server 2, Server 3

© 2024 Cisco and/or its affiliates. All rights reserved. Cisco Public

IMM Server Policy Cleanup – Discovery Cleanup

Server Policy Cleanup

New Capability – Available in Q3FY24 – 1st Phase

- Goal: Cleanup configurations when policies are removed from a deployed Server Profile and the Profile is re-deployed
- Existing Profiles – When a policy is detached, and the SP is not redeployed, then that Profile will be marked as “Inconsistent with Pending Changes” and will be cleaned-up on next SP deploy
- Some 16 Policies will be cleaned-up …
- Won’t be touching Storage Policies & there’s nothing to clean-up with FW Policies

© 2024 Cisco and/or its affiliates. All rights reserved. Cisco Public

Server Policy Cleanup – Discovery

New Capability – Available in Q3FY24 – 1st Phase

- Policy Cleanup during first time Discovery
- Policy Cleanup also during Decommission/Recommission – Considered first time Discovery

© 2024 Cisco and/or its affiliates. All rights reserved. Cisco Public

Domain/Chassis Profile Templates

Domain Profile & Chassis Profile Templates!

- Very Powerful to scale UCS Domains, particularly for near future UCS-X Direct
- For Each Domain Profile Template – Derive up to 20 Domain Profiles
- For Each Chassis Profile Template – Derive up to 80 Chassis Profiles
- For Domain Profile Templates - Consider FI Types, Consider Port Policies, Consider VLAN/VSAN Policies

© 2024 Cisco and/or its affiliates. All rights reserved. Cisco Public

Domain Profile Template

Intersight | Infrastructure Service | Search | 35 | 274 | 121

Overview

Operate
- Servers
- Chassis
- Fabric Interconnects
- Networking
- HyperFlex Clusters
- Storage
- Virtualization
- Integrated Systems

Analyze
- Explorer New

Configure
- Profiles
- Templates

← UCS Domain Profile Templates

Create UCS Domain Profile Template

1. General
2. VLAN & VSAN Configuration
3. Ports Configuration
4. UCS Domain Configuration
5. Summary

General

Add a name, description and tag for the UCS domain profile template.

Organization *
default

Name *
Name

Set Tags
Enter a tag in the key:value format.

Description
Description
0 / 1024

Close | Next

© 2024 Cisco and/or its affiliates. All rights reserved. Cisco Public

Chassis Profile Template

Intersight | Infrastructure Service | Search | 35 | 274 | 121

Overview

Operate
- Servers
- Chassis
- Fabric Interconnects
- Networking
- HyperFlex Clusters
- Storage
- Virtualization
- Integrated Systems

Analyze
- Explorer New

Configure
- Profiles
- Templates

← Templates

Create UCS Chassis Profile Template

1. General
2. Chassis Configuration
3. Summary

General

Enter a name, description and tag for the chassis profile template.

Organization *
default

Name *
Name

Set Tags
Enter a tag in the key:value format.

Description
Description
0 / 1024

Close | Next

© 2024 Cisco and/or its affiliates. All rights reserved. Cisco Public

Create DPT from a DP or Attach DP to DPT

Intersight | Infrastructure Service | Search

Overview

Operate
- Servers
- Chassis
- Fabric Interconnects
- Networking
- HyperFlex Clusters
- Storage
- Virtualization
- Integrated Systems

Analyze
- Explorer (New)

Configure
- Profiles
- Templates

Profiles

HyperFlex Cluster Profiles | UCS Chassis Profiles | UCS Domain Profiles | UCS Server Profiles | Kubernetes Cluster Profiles

Create UCS Domain Profile

All UCS Domain Pr...

Export | 15 items found | 10 per page | 1 of 2

Name	Status	UCS Domain Template	UCS Domain: Fabric Interco...	UCS Domain: Fabric Interco...	Last Update
SJC07-R14-R15	OK		SJC07-R14-FI...	SJC07-R14-FI...	May 6, 2024 7:24 AM
ddd	Not Assigned				Apr 30, 2024 1:41 PM
B26-DomainProfile	OK		B26-6454-M...	B26-6454-M...	Apr 26, 2024 4:53 PM
TME-9508-1	Not Assigned				Apr 26, 2024 4:5
mimaurer-domain-1	Not Deployed Changes		int-ucs-1 FI-A	int-ucs-1 FI-B	Apr 11, 2024 12:3
int-tme-ucs-3	Failed		int-tme-ucs-...	int-tme-ucs-...	Mar 26, 2024 12:5
int-tme-ucs-10	OK		int-tme-ucs-1...	int-tme-ucs-1...	Feb 5, 2024 5:55
sgaree-sj2-151-b18-5g	OK		sgaree-sj2-15...	sgaree-sj2-15...	Jan 26, 2024 8:3
sgaree-cc7-112-11-1	Not Assigned				Aug 28, 2023 6:0
DevNet-emulator_CLONE-3	Not Deployed		dcemulator-4...		Jul 26, 2023 2:59

Deploy
Unassign
Edit
Clone
Set User Label
Attach to Template
Create a Template

Selected 1 of 15 | Show Selected | Unselect All | 1 of 2

© 2024 Cisco and/or its affiliates. All rights reserved. Cisco Public

Intersight Learning Resources

Cisco Compute – YouTube Channel

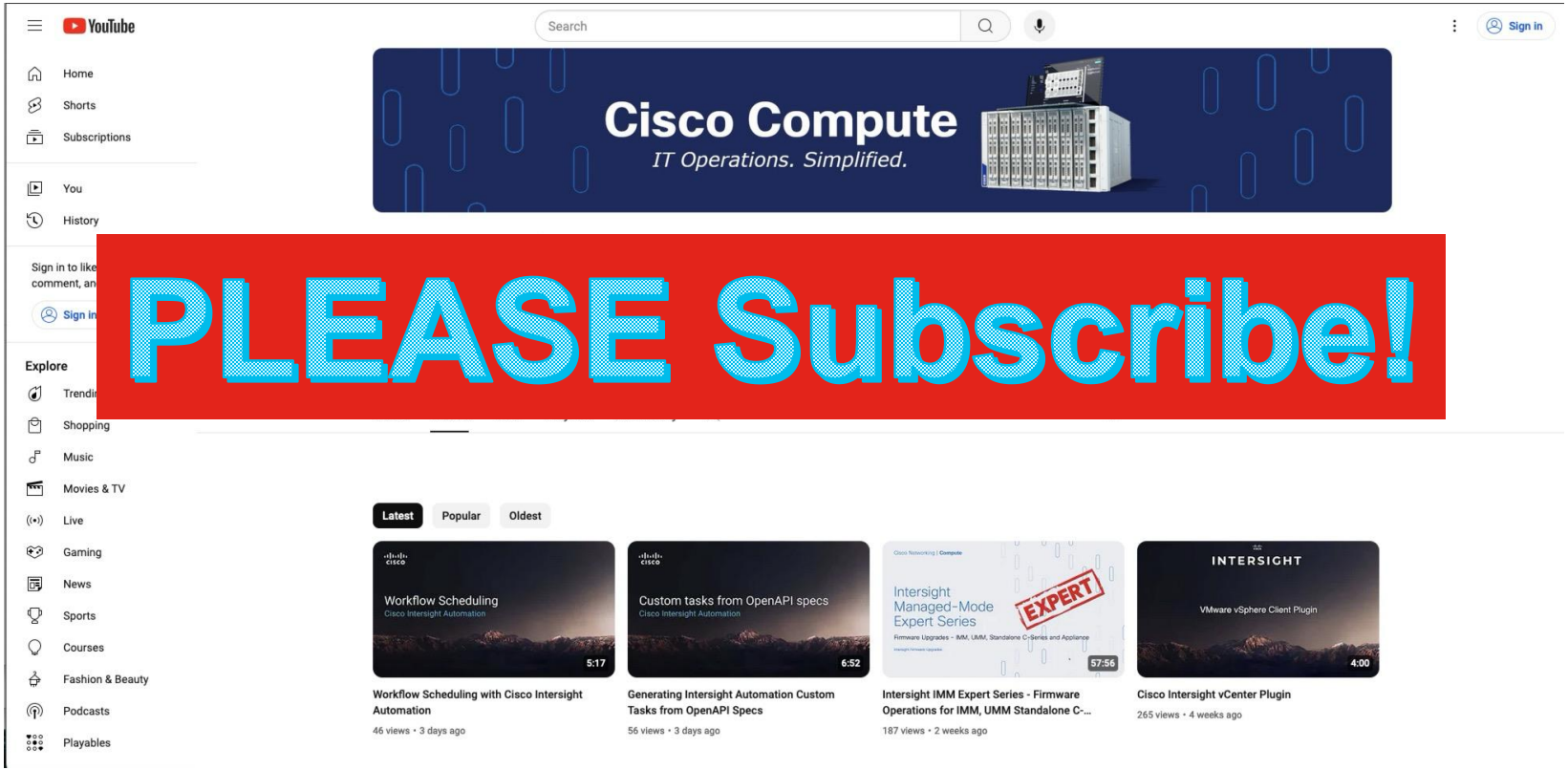

© 2024 Cisco and/or its affiliates. All rights reserved. Cisco Public

Cisco Compute – YouTube Channel

URL & QR Code

https://www.youtube.com/@CiscoCompute/videos

© 2024 Cisco and/or its affiliates. All rights reserved. Cisco Public

IMM Expert Series of Videos – 39 & Counting …

YouTube

Search

Home
Shorts
Subscriptions
You
History

Sign in to like videos, comment, and subscribe.
Sign in

Explore
Trending
Shopping
Music
Movies & TV
Live
Gaming
News
Sports
Courses
Fashion & Beauty
Podcasts
Playables

More from YouTube

IMM Expert Series

Cisco Compute

39 videos 3,708 views Last updated on Apr 24, 2024

Play all Shuffle

This Series of videos, over 100 planned, provides key insights into how to configure:
* Domain Policies & Domain Profiles
* Server Policies and Server Profiles
* Chassis Policies and Chassis Profiles
and numerous Special Use-Case Configurations such as:
* Disjoint Layer-2
* SAN Boot

Designed to help Novices and Experts alike, the IMM Expert Series will have a dedicated video for each and every policy and corresponding Domain Profile and Server Profiles. Designed to train administrators on important "How" and "Why" you define the corresponding policy settings within your Domain/Chassis/Server Profiles.

1 Intersight IMM Expert Series - Introduction & Welcome
Cisco Compute • 913 views • 11 months ago 1:27

2 Intersight IMM Expert Series - Management Modes and Order of Ops Overview
Cisco Compute • 936 views • 11 months ago 9:00

3 Intersight IMM Expert Series - Flow Control Domain Policy
Cisco Compute • 462 views • 11 months ago 8:53

4 Intersight IMM Expert Series - Link Control Domain Policy
Cisco Compute • 280 views • 11 months ago 8:01

5 Intersight IMM Expert Series - Link Aggregation Domain Policy
Cisco Compute • 384 views • 11 months ago 9:42

6 Intersight IMM Expert Series - Multicast Domain Policy
Cisco Compute • 245 views • 11 months ago 7:17

7 Intersight IMM Expert Series - Network Connectivity Domain Policy
Cisco Compute • 260 views • 11 months ago 4:35

8 Intersight IMM Expert Series - NTP Domain Policy
Cisco Compute • 167 views • 11 months ago 5:47

9 Intersight IMM Expert Series - Port Domain Policy
Cisco Compute • 362 views • 11 months ago

© 2024 Cisco and/or its affiliates. All rights reserved. Cisco Public

IMM Expert Series – Cisco Compute

URL & QR Code

https://www.youtube.com/playlist?list=PLIlKAL_0d4EyjLS_chD-BecRc3NrT8O6X

© 2024 Cisco and/or its affiliates. All rights reserved. Cisco Public

Session Demo’s Video YouTube Link

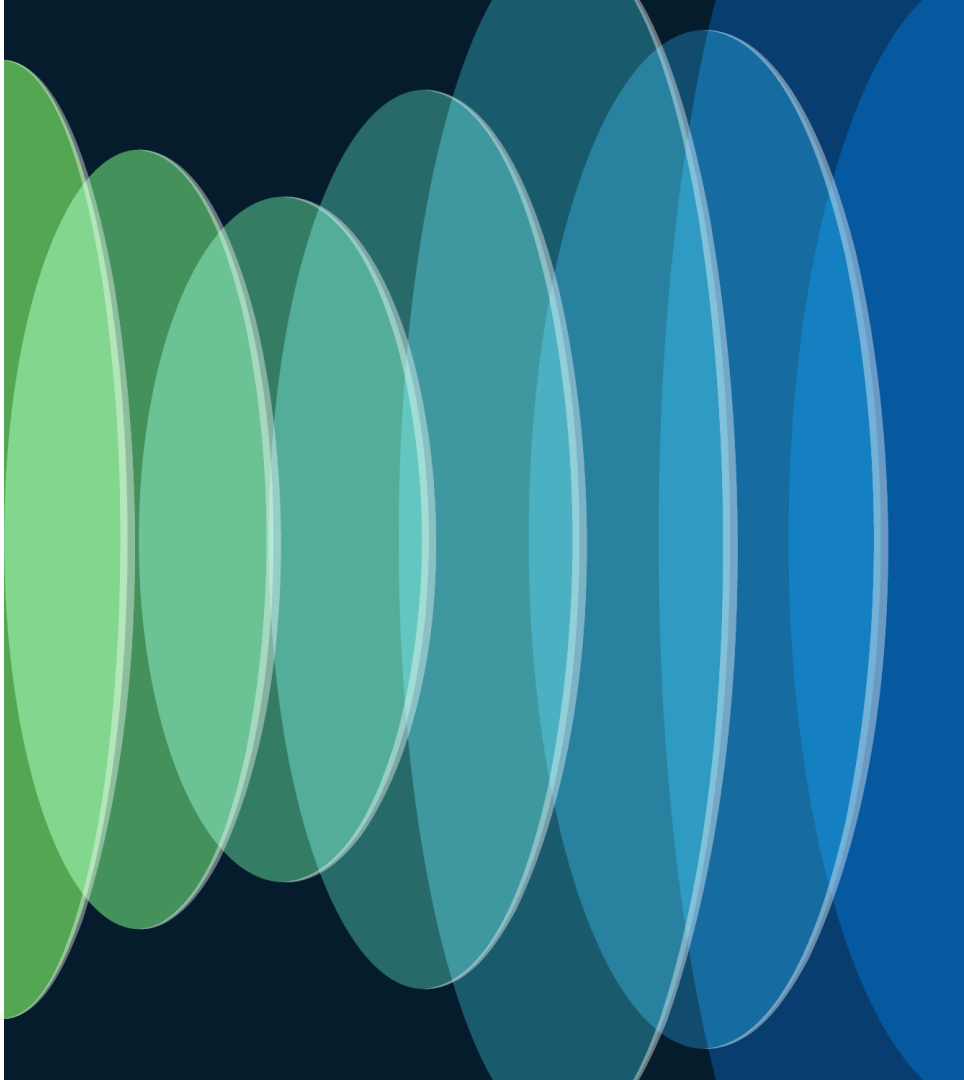

BRKCOM-2005 – Demonstrations!

URL & QR Code

https://youtu.be/_ss0DDtKQSU

© 2024 Cisco and/or its affiliates. All rights reserved. Cisco Public

Complete Your Session Evaluations

Complete a minimum of 4 session surveys and the Overall Event Survey to be entered in a drawing to **win 1 of 5 full conference passes** to Cisco Live 2025.

Earn 100 points per survey completed and compete on the Cisco Live Challenge leaderboard.

Level up and earn **exclusive prizes!**

Complete your surveys in the **Cisco Live mobile app.**

© 2024 Cisco and/or its affiliates. All rights reserved. Cisco Public

Continue your education

- Visit the Cisco Showcase for related demos
- Book your one-on-one Meet the Engineer meeting
- Attend the interactive education with DevNet, Capture the Flag, and Walk-in Labs
- Visit the On-Demand Library for more sessions at www.CiscoLive.com/on-demand

© 2024 Cisco and/or its affiliates. All rights reserved. Cisco Public

cisco Live!

Join Cisco experts and your industry peers in the Intersight User Group on LinkedIn

Be a part of the Intersight user community and find out more about new Intersight virtual meetups coming soon!

 © 2024 Cisco and/or its affiliates. All rights reserved. Cisco Public

Thank you